A review of processes and technologies to valorize gases from integrated steelworks

Wilmar Uribe-Soto[a], Jean-François Portha[a], Jean-Marc Commenge[a] and Laurent Falk[a]

[a] University of Lorraine, Reactions and Chemical Engineering Laboratory, UMR 7274, Nancy F-54001, France. CNRS, Reactions and Chemical Engineering Laboratory, UMR 7274, Nancy F-54001 France. jean-francois.portha@univ-lorraine.fr

Abstract:

The steel industry is the main generator of CO_2 among the different industrial sectors. That is why efforts are being made to reduce or avoid CO_2 emissions by process optimization or by Carbon Capture and Storage (CCS) processes. On the other hand, it must be considered that most of the chemicals used in our society operate with carbon as a central element. In this case, the CO_2 should be seen as a carbon source that may be transformed into high value added products. In this context, the VALORCO (VALOrization and Reduction of CO_2 emissions in the industry) project was launched. The VALORCO project considers different pathways of CO_2 valorization through its chemical transformation. This particular study focuses on the thermochemical conversion and valorization of gases from integrated steelworks. Thereby in the steel production by blast furnace technology, three main gases must be considered, namely Blast Furnace Gas (BFG), Coke-Oven Gas (COG) and Basic Oxygen Furnace Gas (BOFG). The general objective of this study is to determine the best solutions to valorize these carbon–rich gases. Many processes and technologies can be identified, depending on the volume and composition of the available gases. The identification, evaluation and comparison of the valorization pathways thus the design and optimization of the selected process, including evaluation of industrial catalysts and testing a reactor at pilot scale, are the main tasks of this study that will be carried out by the different partners. In the present work, a review of several alternatives proposed during last years to valorize these gases is carried out.

Keywords:

Coke Oven Gas, Blast Furnace Gas, Basic Oxygen Furnace Gas, Thermochemical Valorization, Water Gas Shift Reaction, Methane Reforming, Methanol Synthesis.

1. Introduction

Global warming is perhaps one of the most important issues which humanity has to deal with. Carbon dioxide (CO_2) and other greenhouse gases (GHG) such as methane (CH_4), are the origin of the problem. The steel industry is the main generator of CO_2 among the different industrial sectors. Certainly [1], this industry is responsible for 30% of the whole industrial emissions (6.5 Gt in 2011 [2]) corresponding to 6% of CO_2 emissions from total anthropogenic sources (31.3 Gt in 2011[2]).

That is why efforts are being made to achieve the reduction of CO_2 emissions in the steel industry. The first attempts proposed includes improving energy efficiency of the process, which minimizes the consumption of the reducing agent and fuel (coke or natural gas) as well as electricity. Nowadays [3], CO_2 emissions are of the order of 1.97 t of CO_2 per t of crude steel when a blast furnace with oxygen converter is used. In this case, both reducing agent and fuel, correspond to coke. These emissions go down to 1.10 t of CO_2 per t of crude steel in the case of direct reduction process which uses natural gas as a substitute for coke. A different approach, (29.2% of the world steel production for the year 2012 [4]), is the recycling of iron instead of iron ore. In this case [3], an electric arc furnace is used, allowing CO_2 emissions of the order of 0.45 t of CO2 per t of crude steel. Indeed, these emission values are close to their thermodynamic limits [3]. The best European steel mills are operating at the limit of what is technically possible at this moment [5]. The use of coal, biomass, used lubricating oils and even plastic waste as a substitute for a portion of the coke has been also considered [6-8]. This allows the reduction of CO_2 through the reduction of the coke consumption.

Many other alternative technologies to the blast furnace have been proposed. A comparison of these new technologies in opposite of the blast furnace process is proposed by Hasanbeigi et al. [9]. The only alternative technologies already in use commercially are the COREX® process, the FINEX® process and the direct reduction process, but their implementation are not widespread. In fact, all of these processes represent just over 1% of world steel production for 2012 [4]. The other technologies are still at pilot scale or at research and development stages.

Regarding the blast furnace process, another improvement has been studied: the Top Gas Recycled Blast Furnace (TGRBF). In this case, pure oxygen instead of air is used, to obtain a blast furnace free-nitrogen gas. CO_2 from the off-gas is then removed, so that a stream rich in carbon monoxide (CO) is feedbacked to the blast furnace. The CO_2 stream resulting is either sent to a network for use in other processes (after purification of CO_2), or sent to a Carbon Capture and Storage (CCS) system. CO_2 emissions can be reduced between 5 and 10% by using the TGRBF, between 25 and 30% when using a CCS and up to 60% for the combination TGRBF - CCS, compared to the conventional use of blast furnace [10]. As a part of the European research project ULCOS (Ultra-Low CO_2 Steelmaking) [5], this technology has been considered as an alternative, among others such as the ISARNA (smelting reduction process) process, the ULCORED (advanced direct reduction) process and the ULCOLYSIS (Electrolysis) process. However, at the end of the ULCOS project, some major obstacles have compromised the TGRBF fulfilment. The major challenges include: the cost of production and operation of the proposed process, the fall of the economic value of CO_2 quota level and the social acceptability of CCS, with more and more european countries taking forward measures against this practice.

In the solutions previously discussed, the main effort is made to reduce CO_2 emissions or to trap it in the subsoil. On the other hand, it must be considered that most of the chemicals used in our society operate with carbon as a central element. In this case, the CO_2 should be seen as a renewable carbon source that may be transformed into products with high added value [11]. In this context, the VALORCO (VALOrization and Reduction of CO_2 emissions in the industry) project was launched. The general objective of the project is to achieve a reduction of 30% in the current CO_2 emissions on a carbon basis. The VALORCO project considers different pathways of CO_2 valorization through its chemical transformation. This particular study focuses on the thermochemical conversion and valorization of gases from integrated steelworks.

In the steel production process, using the technology of the blast furnace, three main gases have to be considered, namely Blast Furnace Gas (BFG), Coke-Oven Gas (COG) and Basic Oxygen Furnace Gas (BOFG). Each stream exhibits specific characteristics (flow and compositions). The general objective of this study is to determine the best solutions to valorize these carbon–rich gases. Many processes can be identified, depending on the volume and composition of the available gases. The identification, evaluation and comparison of the valorization pathways, thus the design and optimization of the selected process are the main tasks of this study.

During the past few decades, several alternatives and processes to valorize the available gases have been proposed; including their use for energy production, the recovery of valuable compounds such hydrogen or the production of chemicals and fuels. This work provides a review of some of the most important technologies and processes. Firstly, the characteristics of each available gas will be considered. Then, we will focus on the different process flow sheets proposed in the literature for the valorization of gases. Given the essential character of hydrogen in the CO_2 valorization, the possibilities of its generation from available gases will be studied by methane reforming or by water gas shift reaction (WGSR).

2. Available gases

This study will focus on the three main gases linked directly to the steel production by the blast furnace process. Each gas is generated at different stages of the process, consequently they have different characteristics. The three gases have more or less the same compounds, but in different proportions. Table 1 summarizes the flow rates and composition for each gas for a standard modern

steel plant of 6 Mt per year production. According to the available flows, the BFG is by far the largest stream. It has a flow rate about 20 times greater than the other two available streams. This fact will be important to define how these gases will be mixed in relation to the construction of the valorization flow sheet.

Table 1. Volumetric flow rates, lower heating values and composition of available gases [12].

	COG	**BFG**	**BOFG**
Volumetric flow rate (Nm^3/h)	40 000	730 000	35 000
Lower heating value (kJ/Nm^3)	15 685	3 358	7 164
Compound	Basis molar fraction (%)		
CO_2	1,2	21,6	20,0
CO	4,1	23,5	54,0
H_2	60,7	3,7	3,2
CH_4	22,0	0,0	0,0
CxHy	2,0	0,0	0,0
N_2	5,8	46,6	18,1
H_2O	4,0	4,0	4,0
Ar + O_2	0,2	0,6	0,7

2.1. Chemical compounds present in the available gases

Considering the overall availability, nitrogen is the most important component. The inert character of nitrogen may render CO_2 valorization difficult, since this compound will be removed in order to avoid excessive compression costs and capital costs (equipment size). A similar situation occurs with argon and oxygen, but the quantity of these compounds is low.

The next two compounds, in order of quantity, are CO and CO_2. They are more or less in the same proportion. From a chemical point of view the CO_2 reactivity is almost always lower than of the CO's one if the synthesis of a same product is considered. Also, CO is a gas which can be used as reducing agent.

The fourth compound to be considered is hydrogen. It is a key component since it can reduce CO_2 and CO to produce a high value added product. Unfortunately, its quantity is not very large compared to the present amount of CO_2 and CO. A way to increase the available hydrogen is the reforming process of methane contained in the COG or the conversion of the CO contained in the BFG and the BOFG using a WGSR.

Regarding their availability, CH_4 and other hydrocarbons are placed in the last position among the valuable compounds. Despite limited availability, these compounds may play a central role in the definition of valorization process. In fact, these compounds are mainly present in the COG. That is why a reforming process will allow increasing the available quantity of H_2.

3. Thermochemical valorization processes for the available gases

Several process flow sheets have been proposed to valorize the available gases from integrated steelworks. The process alternatives that are already established or those still in the phase of development and validation can be grouped into three main categories:

- the use as a fuel within the steel mill or in a nearby power plant, including their possible use as reducing agents;
- the recovery of valuable compounds, such as hydrogen or methane;
- the integration of a chemical sector to obtain a high value added product, such as methanol or urea. In this category, we also include the complementary processes that aim to increase the available hydrogen, such as methane reforming or WGSR. Poly-generation system in which both chemical product and energy are produced will also be considered.

3.1. Thermal use of the available gases

The three available gases contain significant quantities of combustible compounds, such as H_2, CO and CH_4, as well as small amounts of other hydrocarbons in the case of the COG. In consequence, these gases have not negligible calorific values. Most steelmills in Europe have developed thermal integration projects [3]. The gases are used to heat the different furnaces, steel before rolling, slabs, etc. or as a reducing agent in the blast furnace (reserved use for the COG and the BOFG). The gases which are not burned into the plant are fed to the thermal power plant.

3.2. Recovery of valuable compounds

In the available gases, there are three valuable compounds that may be recovered: H_2, CH_4 and CO. These three compounds may be used onsite or be sold. For example, some studies have evaluated the possibility of recovering H_2 for use in fuel cells [13-14]. Although these three compounds are present in the available gases, their compositions can make easy some applications. Thus, there are studies for H_2 and CH_4 recovery from COG [15] or for CO separation from the BFG [16].

3.2.1. Recovery of H_2 and CH_4 from the COG

The Pressure Swing Adsorption (PSA) and membrane separation process are the two main technologies for these applications, even if others technologies are also available, such as cryogenic separation.

The PSA uses several packed columns which operate in parallel within an operation cycle of adsorption - desorption. The adsorbents used for the separation of hydrogen are primarily carbonaceous materials, alumina oxides or zeolites. An important aspect for the use of this process is that the presence of certain compounds (H_2S, NH_3, higher hydrocarbons) is very restrictive. In fact, these compounds can be adsorbed in an almost irreversible manner in the adsorbent material. For this reason, the COG must be pre-conditioned previously. In relation to the outputs, there will be two different streams, namely an almost pure H_2 stream and another stream concentrated in CH_4 mix with other compounds present in the COG. The off-H_2 stream has 99.99% purity, and the recovery is around 90% [15]. At the moment, there are no commercial PSA units to recover H_2 from COG [15].

Another proposed technology for the recovery of H_2 from COG is membrane separation process. In this process, a high pressure gas stream go through a membrane which is selectively permeable to one or more compounds found in the gas. As a result, there will be an output stream, named "permeate", which is rich in compounds that have gone through the membrane and another stream, named "retentate", rich in the other compounds. It is also possible to use several membrane modules, interconnected in different ways (parallel, series, cascade, etc.) to achieve a given specification. Typically 80 % to 98 % recovery of feed H_2 with a purity of 90 % to 99 % is achieved [15].

Finally, another possibility is the cryogenic separation process based on the liquefaction temperature differences of the constituents of the COG. Each compound is liquefied at a given temperature and then separated. This process is more economical for large scale applications [17], face to the others alternatives presented above. There is a correlation between hydrogen purity, recovery, and tail gas pressure: moderate purity (90-95%) will achieve with high recovery (90 - 95 %) when the tail gas pressure is kept low (0.07Mpa) [17].

3.2.2. Recovery of CO from the BFG

A recent study [16] examines the possibility of using a PSA to recover CO and CO_2 contained in the BFG. In this study, thirteen different adsorbent materials were tested to eventually retain only two. Based on results at the laboratory scale, a pilot unit with an operating capacity of 3 tons of CO_2 per day, was built. The undesirable compounds (H_2O, H_2S) are removed using adsorption columns packed with silica-alumina and activated carbon, respectively.

3.3. Thermochemical valorization processes for the available gases

The compounds present in the three available gases are the same as those contained in a synthesis gas but in different proportions. Therefore, it may be considered that it is possible to use these gases to develop a chemical sector based on an economy of the CO_2. Nevertheless, there is a very important aspect to consider: the overall availability of each compound. First, the synthesis of a high value added product from these gases results in the reduction of CO_2 and CO, using in this case the H_2 as reducing agent (thermochemical conversion). As the availability of H_2 is restricted, it is the limiting reagent. Then, it is necessary to seek options in order to increase its quantity. Two options will be considered, according to the information of the literature: the reforming of methane found in the COG and the use of the WGSR applied to the CO contained in the BFG and the BOFG.

3.3.1. WGSR

The WGSR is a chemical reaction that converts a mixture of CO and H_2O in a mixture of CO_2 and H_2:

$$CO + H_2O \Leftrightarrow CO_2 + H_2 \quad \Delta_rH°(298\ K) = -41\ kJ/mol \quad \Delta_rG°(298\ K) = -31\ kJ/mol \quad (1)$$

This reaction is susceptible to temperature changes. By elevating temperature, the equilibrium will tend to the reactant formation under the principle of Le Châtelier. Thus, there is an interest to develop low temperature processes to increase the conversion of CO. Historically, this process takes place at a relatively high temperature with an iron catalyst, but the increased cost of energy, the development of new more active copper catalysts made possible the development of new processes in two steps. So, we find that at industrial scale, the WGSR is performed using a cascade of adiabatic reactors with a high temperature (HTS: High Temperature Shift) step followed by a low temperature step (LTS: Low Temperature Shift) with a cooling inter-stage [18-19]. Thus, the HTS takes advantage of high reaction rates, but is thermodynamically limited, which results in an incomplete conversion of CO with a corresponding content in the output between 2 and 4% (molar fraction) [19]. With the decreased temperature in the LTS, the equilibrium is displaced towards the production of hydrogen, which allows obtaining a CO content of less than 1% (molar fraction) [19].

Due to different operating conditions in each step of the process, different catalysts must be used to ensure an optimal conversion. The commercial catalyst for the HTS is made of iron oxide (II, III) Fe_3O_4 and chromium (III) oxide Cr_2O_3 [20]. The inlet temperature for the HTS vary from 310 °C to 450 °C [19], (usually 350 °C with, in this case an outlet temperature of 450 °C). There is an increase in temperature with the length of the reactor. On the other hand, the catalyst corresponding to the LTS is composed of copper on zinc oxide ZnO mixed with alumina Al_2O_3 [20]. The inlet temperature, in this case, vary from 200 °C to 250 °C [19]. The outlet temperature must be less than 280 °C, because of the susceptibility of copper to thermal sintering and to reduce side reactions. It should be noted that zinc catalyst (LTS) is very sensitive to sulfur, it is necessary to limit its content in the fed gas and check the reactor to track its deactivation. Another option to mitigate the problem is the use of a guard bed upstream of the reactor [19]. Regarding the pressure range, industrial reactors operate at pressures between 25 and 35 bars [18]. Several kinetic laws for different catalysts are proposed by Smith et al. [19].

Other types of reactors have been proposed to develop this reaction. For example Criscuoli et al. [21] conducted a feasibility study for the use of a membrane reactor. However, the obtained results show that this technology is not yet economically feasible because of the cost of the membranes. Another promising technology in the medium term is the SEWGS process (Sorption Enhanced Water Gas Shift). In this process, the WGSR is shifted to the products formation by removing CO_2 from the reaction medium with an adsorbent placed in the reactor [22].

This reaction has been proposed as an additional step of CCS processes. Some studies show its usefulness applied to the BFG [23-25]. Figure 1 shows a schematic representation of this process. After the WGSR, the generated CO_2 is separated by absorption in Selexol® solvent. Due to the catalyst sensitivity to poisons, a gas pre-treatment step is necessary. The capital expenditure (capex) of reactors is negligible compared to the cost of the separation system [21]. Gielen [24] and Ho et al. [25] found that the costs are similar or lower than those corresponding to a CO_2 separation system without CO conversion. This is explained by the fact that the costs of the separation system are proportional to the CO_2 concentration.

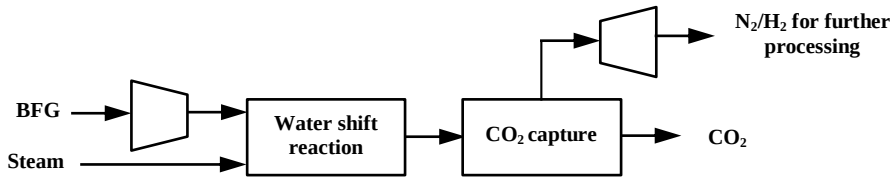

Fig. 1. Scheme of CO_2 capture process using the WGSR, adapted from Ho et al. [25].

A detailed study of the equilibrium conversion of WGSR applied to the BFG was conducted by Chen et al. [26]. Two parameters were studied: the H_2O / CO ratio and temperature. The results show a CO conversion between 96 and 99 % for an H_2O / CO ratio greater than 1 and a temperature between 200 and 400 °C. They also studied the influence of the initial CO_2 content on the H_2 productivity. To do this, the calculation of the production of H_2 (Nm^3 H_2 / Nm^3 BFG) depending on the H_2O / CO ratio and temperature was performed for two cases: with and without preliminary CO_2 capture. In both cases, a productivity of 0.21 Nm^3 H_2 / Nm^3 BFG was obtained. Finally, this study also assessed the application of the WGSR to the COG obtained after methane reforming. The results show that when the temperature is between 200 and 300 °C with an H_2O / CO ratio in the range of 1 to 2, the CO conversion was equal to 99.6%. A similar analysis was proposed by Turpeinen et al. [27].

3.3.2. Methane reforming

Methane reforming contained in COG is a process which enables to increase the amount of available H_2. This process has been important in the generation of synthesis gas from natural gas. Generally, the methane reforming is a catalytic process which takes place under high temperature conditions. There are three different ways for the reforming of methane, namely:

Steam Methane Reforming	$CH_4 + H_2O \Leftrightarrow CO + 3H_2$	$\Delta_r H°(298\ K) = 205$ kJ/mol (2)
Partial oxidation	$CH_4 + 1/2O_2 \Leftrightarrow CO + 2H_2$	$\Delta_r H°(298\ K) = -36$ kJ/mol (3)
Dry reforming	$CH_4 + CO_2 \Leftrightarrow 2CO + 2H_2$	$\Delta_r H°(298\ K) = 247$ kJ/mol (4)

Other secondary reactions are also present (WGSR, coking, etc.). The reforming of methane may be carried out by one of this ways or with a combination of those. There are three technologies available for methane reforming [28]. Efforts are underway to develop new processes with more environment-friendly operating conditions [29]. The most common technology for large-scale applications is Steam Methane Reformer (SMR). This technology uses only steam as the oxidizing agent; consequently the amount of H_2 produced is higher compared to other technologies. However, this process has a very high energy requirement due to the endothermic character of the reaction. There are some applications, on an industrial scale, for the SMR with CO_2 injection [29]. It is mainly used in the units in which the synthesis gas produced is used for methanol synthesis. Thus, it is possible both to adjust the H_2 / CO ratio and to reduce process energy requirements. An alternative technology to reduce these energy requirements is the use of an Auto-Thermal Reforming (ATR) reactor. Methane can react either with O_2 (exothermic reaction) or with steam (endothermic reaction), thereby balancing the energy requirements [28]. The H_2 / CO ratio obtained can also be adjusted according to the product that will be synthesized. Industrial units that work with this principle are less expensive and may be built at different scales. It is also possible to inject CO_2 into the reactor to react with methane, thus having a tri-reforming process. This process is being developed; there are already units

at pilot scale, but large-scale demonstration is required. Finally, the third technology used on a commercial scale is based on the Catalytic Partial Oxidation (CPO) of methane. In this case, methane is mixed with a quantity of air which allows to operate below the stoichiometry conditions, in order to prevent the complete combustion of methane. Due to the very fast reaction rates, the residence times are short (milliseconds), which allows to build compact reactors [28].

COG has a significant CH_4 content which may be used to increase the amount of available H_2. There are several studies proposed on different aspects of this application. Thus Turpeinen et al. [27] proposed a study on the equilibrium conversion COG using SMR, dry reforming and CPO. An analysis of energy requirements is provided. On the other hand, Shen et al. [30] studied a system composed of three parts, namely:

- COG purification step to remove undesirable compounds (Benzene, Naphthalene, NH_3, etc.),
- a membrane separation process which produces two streams, one rich in H_2 (over 90%) and the other rich in CH_4 (over 60%),
- Reforming CH_4-rich gas, by partial oxidation in a catalytic fixed bed reactor filled with coke particles of 10 mm.

The results show that at a temperature between 1200 and 1300 °C, a conversion of greater than 99 % CH_4 can be obtained with a H_2 / CO ratio between 0.3 and 1.4. The Dry Reforming of Methane (DRM) has been studied extensively. Thus, Bermudez et al. [31] analyzed firstly the CH_4 equilibrium conversion contained in the COG at different temperatures, CH_4 / CO_2 ratios and pressures. The analysis shows that for almost complete conversion of CH_4, temperatures above 800 ° C, pressures as low as possible and a ratio of CH_4 / CO_2 stoichiometric are needed. Then the authors studied the use of different catalysts for implementing this operation (activated carbon catalyst [32] Ni / γAl_2O_3 catalyst [33]). Finally, the synergistic effect of the use of these two catalysts were discussed [34]. On the other hand, Zhang et al. [35] analyzed the use of three different activated carbon catalysts, at temperatures between 800 and 1200 °C.

Norinaga et al. [36] proposed a study about the development of a pilot unit for the reforming of hot-COG, i.e before treatement to remove tar and other compounds. In this case, a non-catalytic partial oxidation is used. The results showed a complete conversion of tar and almost complete for CH_4. The temperature inside the reactor may reach 1400 °C. The tests were conducted at atmospheric pressure. The COG flow fed is between 28 and 103 Nm^3 / h, with a corresponding injection of between 12 and 30 Nm^3 / h of O_2. Other studies have been proposed for the same application, but this time using SMR. Thus, Yue et al. [37] used a NiO / MgO-Al_2O_3 catalyst. The gas used is a simulated COG where the tar was replaced by two model molecules, toluene and naphthalene. Tests on a laboratory scale have been run to temperatures between 700 and 850 ° C and atmospheric pressure. The results showed a complete conversion for toluene, naphthalene and almost complete for methane. Onozaki et al. [38] have proposed a non-catalytic system, wherein SMR and CPO are used. The results show a conversion of more than 98% of the total carbon to CO at a temperature of 900 ° C.

3.3.2. Methanol synthesis

In most of methane from COG reforming studies, the final objective was to increase the amount of available H_2. However, it is also possible to use the manufactured gas to produce methanol. In China, over 10 methanol production units have been built based on this principle, having a capacity between 70 and 200 10^3 tons / year [39]. Ekbom et al. [40] and Lundgren et al. [41] examined the production of methanol from the COG and BOFG, as well as the use of a manufactured gas from biomass gasification. In total, four different scenarios were proposed. In scenario A (using the COG with 40 % of BOFG available), a methanol production capacity of 98,000 tons / year was calculated with a 70 % efficiency (calculated on an electric equivalent basis). Bermudez et al. [42] studied the production of methanol from COG (with a previously DMR step, Fig. 2) compared to the conventional process: SMR and CPO of natural gas. The comparison is made in terms of energy consumption, CO_2 emissions, raw material consumption and the purity of the methanol. The study concluded that the energy consumption is lower in the case using COG but the process from natural gas allows better energy recovery. CO_2 emissions are lower when the COG is used (0.74 mol CO_2/mol

CH_3OH against 1.23 mol CO_2/mol CH_3OH). Finally, at the consumption of raw materials and product purity, both methods have similar results. However results show a strong dependency on the geographical position.

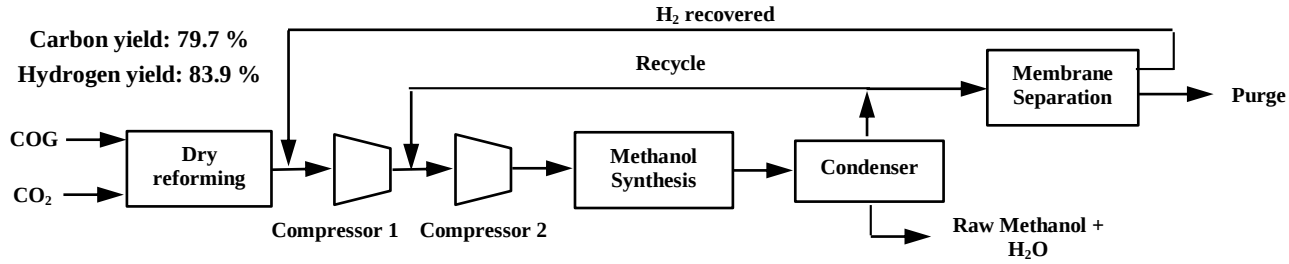

Fig. 2. Methanol production from COG whit a previously DMR step, adapted from Bermudez et al.[42].

3.3.3. The poly-generation systems

These systems, where electricity, useful heat and a chemical product are generated simultaneously, have received much attention in recent years [43]. These systems have some advantages compared to conventional ones, namely [44]: a flexible production of each product or service, which can be adjusted according to market demands; increased thermodynamic efficiency through more efficient use of heat (cogeneration); the investment costs are lower compared to conventional plants due to economies of scale. The studies of poly-generation systems to valorize the available gas have been developed by several authors. Thus, Xuelei et al. [45] proposed a study of three different methods to valorize the COG. A sensitivity analysis was carried out in order to assess the influence of the raw material, the product price and the quantity produced, on each process economy. The first process is the use of the COG to synthesize methanol, the second one involves its utilization as a fuel in a gas turbine into a combined cycle, while the third one may be seen as an integration of the two previous ones: a poly-generation system (Fig. 3).

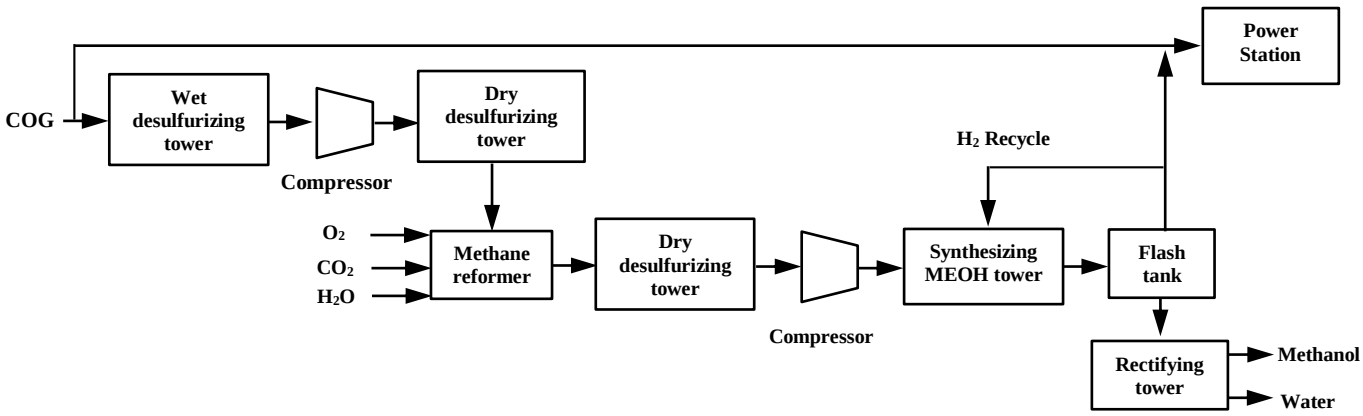

Fig. 3. Poly-generation system with COG as raw material, adapted from Xuelei et al. [45].

The Internal Rate of Return (IRR) for the three projects is higher than the reference one. In relation to the scale of production, the results show that for plants that produce less than 600,000 tons / year of coke, combined cycle is the best option. For those that produce between 600,000 and 3.1 million tons / year of coke, methanol production was the ideal project. Finally, if coke production is more than 3.1 million tons / year, a poly-generation system is the best option. In the three cases, the price of COG is the parameter that has the strongest influence on the profitability of the process.

Ghanbari et al. [46-50] have proposed several studies for the use of poly-generation system feeding by the three available gases. Fig. 4 shows a schematic representation of this system. These studies [46-50] discuss different poly-generation systems. Thus, the first study [46] was about the optimization of a poly-generation system in which the blast furnace is fed by pure O_2. The second study [47], the question was to validate the use of other raw materials (biomass, oil and natural gas)

as substitute reducing agents in the blast furnace and fuel in poly-generation system, after [48], an economic analysis and a Life Cycle Assessment (LCA) for the previous configuration (blast furnace fueled with pure O_2) was proposed. Finally, [49-50] have treated the case of a poly-generation system in which the furnace is fed with air (conventional operation). In the first study, [49] design and optimization of the system were developed. Based on these results, a technical and economic analysis is proposed [50]. The carbon dioxide emissions could be reduced by more than 50% in comparison with conventional steel making [49].

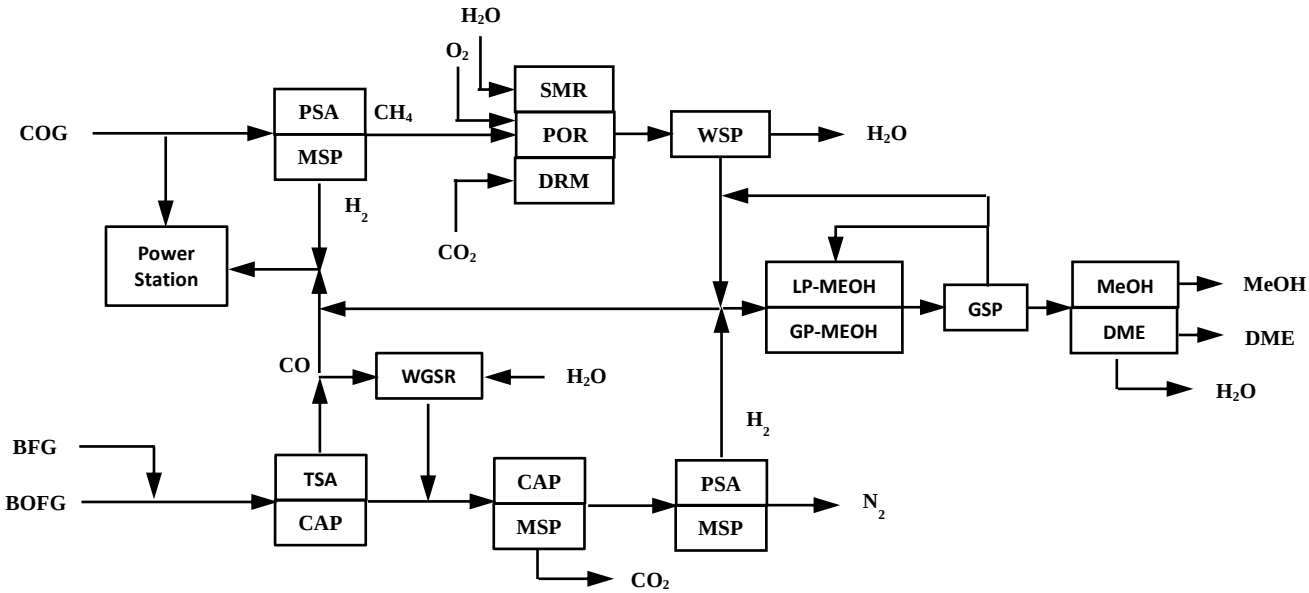

Nomenclature: TSA: temperature swing adsorption, PSA: pressure swing adsorption, CAP: Chemical Absorption Processes, MSP: Membrane Separation Processes, WGSR: Water-Gas Shift Reaction, LPMEOH: liquid-phase methanol unit, GPMEOH: gas-phase methanol unit, GSP: gas separation unit, DME: dimethyl ether purification unit, MEOH: methanol purification unit, SMR: steam methane reforming, POR: partial oxidation reforming, DMR: dry reforming of methane, WSP: water separation.

Fig. 4. Poly-generation system with the three available gases as raw material, adapted from Ghanbari et al. [49].

Finally, several authors have treated the case of a poly-generation system in which the raw materials are the COG and manufactured gas from the gasification of coal. Yi et al. [51-53] proposed three complementary studies on this subject. In the first study [51] the proposed system is optimized using the Aspen Plus® process simulation software. Then, [52-53] the system was evaluated by considering: an energy analysis, CO_2 emissions and an economic analysis. A sensitivity analysis (parameter variation) was also carried out. A similar system is discussed by Li et al. [54]. In this case, poly-generation system considers the production of three different products: methanol, dimethyl ether and dimethyl carbonate. This system was simulated using Aspen Plus® software, including a detailed kinetic model.

Conclusion

In the steel-making process, three main gas streams are generated. The compounds in these streams are similar to those found in a synthesis gas. For this reason, the thermochemical processing of these gases is an option to valorize the carbon dioxide produced. Many products may be synthesized from the available gases. To do this, several processes have been proposed. In particular there may be mentioned hydrogen recovery schemes. The application of the water gas reaction in the CO-rich streams (BFG and BOFG) and methane reforming for COG can increase the amount of hydrogen available. For the actual valorization, the most common flow sheet in the industry is the synthesis of methanol from the COG. There are also poly-generation schemes that have been proposed, but which are still under development.

Acknowledgments

The authors thank the Agency for the Environment and Energy Management (ADEME) for funding this research project.

References

[1] International Energy Agency, Tracking industrial Energy efficiency and CO_2 emissions, Chapter 5, p. 96, 2007.

[2] International Energy Agency, CO_2 Emissions from fuel combustion highlights 2013 – Excel Tables, 2013.

[3] Birat J.P. Carbon dioxide (CO_2) capture and storage technology in the iron and steel industry. Chapter 16 in « Developments and innovation in carbon dioxide (CO_2) capture and storage technology » 2010; 1: Carbon dioxide (CO_2) capture, transport and industrial applications, p. 492-518.

[4] Worldsteel Association. Steel statistical yearbook 2013. Worldsteel Association, Brussels, Belgium. Available at: http://www.worldsteel.org/publications/bookshop/product-details.~Steel-Statistical-Yearbook-2013~PRODUCT~SSY2013~.html [accessed 04.9.2014].

[5] Meijer, K., Denys, M., Lasar, J., Birat, J.P., Still, G., Overmaat, B. ULCOS: ultra-low CO_2 steelmaking. Ironmaking & Steelmaking. 2009; 36(4) 4: 249-251.

[6] Melendi, S., Diez, M.A., Alvarez, R., Barriocanal, C. Plastic wastes, lube oils and carbochemical products as secondary feedstocks for blast-furnace coke production. Fuel Processing Technology. 2011; 92(3):471-478.

[7] Feliciano-Bruzal, C. & Mathews, J.A. BIO-PCI, Charcoal injection in Blast Furnaces: State of the art and economic perspectives. Revista de Metalurgia 2013; 49(6): 458-68.

[8] Suopajärvi, H., Pongrácz, E., Fabritius, T. The potential of using biomass-based reducing agents in the blast furnace: A review of thermochemical conversion technologies and assessments related to sustainability. Renewable and Sustainable Energy Reviews. 2013, 25: 511-28.

[9] Hasanbeigi, A., Arens, M., Price, L. Alternative emerging ironmaking technologies for energy-efficiency and carbon dioxide emissions reduction: A technical review. Renewable and Sustainable Energy Reviews. 2014, 33:645-58.

[10] Xu, C. & Cang, D. A brief overview of low CO_2 emission technologies for iron and steel making. Journal of iron and steel research, international. 2013, 17(3): 1-7.

[11] Aresta, M., Dibenedetto, A., Angelini, A. The changing paradigm in CO_2 utilization. Journal of CO_2 Utilization. 2013, 3(4): 65–73.

[12] Private communication, 2014.

[13] Joseck, F., Wang, M., Wu, Y. Potential energy and greenhouse gas emission effects of hydrogen production from coke oven gas in U.S. steel mills. International journal of hydrogen energy. 2008, 33: 1445–54.

[14] Hwang, J.- J., Chang, W.-R. Life-cycle analysis of greenhouse gas emission and energy efficiency of hydrogen fuel cell scooters. International journal of hydrogen energy. 2010, 35: 11947 –56.

[15] Bermúdez, J.M., Arenillas, A., Luque, R., Menéndez, J.A. An overview of novel technologies to valorise coke oven gas surplus. Fuel Processing Technology. 2013, 110: 150-9.

[16] Saima, H., Mogi, Y., Haraoka, T. Development of PSA System for the Recovery of CO_2 and CO from Blast Furnace Gas in Steel Works. Energy Procedia. 2013; 37: 7152-9.

[17] Chang, K., Li, Q., Li, Q. Refrigeration cycle for cryogenic separation of hydrogen from coke oven gas. Frontiers of Energy and Power Engineering in China. 2008; 2(4): 484-8.

[18] Schumacher, N., Boisena, A., Dahl, S., Gojhale, A. A., Kandoi, S., Grabowc, L.C., Dumesic, J. A., Mavrikakisc, M., Chorkendorff, I. Trends in low-temperature water–gas shift reactivity on transition metals. Journal of Catalysis. 2005; 229(2): 265–75.

[19] Smith R. J., Loganathany, M., Shanthaz, M. S. Trends in low-temperature water-gas shift reactivity on transition metals. International Journal of Chemical Reactor Engineering. 2010; 8(1): 2-33.

[20] Callaghan, C. Kinetics and catalysis of the water-gas-shift reaction: A microkinetic and graph theoretic approach. Doctoral dissertation, Worcester Polytechnic Institute. Available at: http://www.wpi.edu/Pubs/ETD/Available/etd-050406-023806/ [accessed 04.9.2014].

[21] Criscuoli, A., Basile, A., Drioli, E., Loiacono, O. An economic feasibility study for water gas shift membrane reactor. Journal of Membrane Science. 2001; 181: 21–27.

[22] Kuramochi, T., Ramirez, A., Turkenburg, W., Faaij, A. Comparative assessment of CO_2 capture technologies for carbon-intensive industrial processes. Progress in Energy and Combustion Science. 2012; 38: 87-112.

[23] Farla, J. C. M., Hendriks, C. A., Blok, K. Carbon dioxide recovery from industrial processes. Climatic Change. 1995; 29(4): 439–61.

[24] Gielen, G. CO_2 removal in the iron and steel industry. Energy Conversion and Management. 2003; 44:1027–37.

[25] Ho, M., Allison, G. W., Wiley, D. E. Comparison of MEA capture cost for low CO_2 emissions sources in Australia. International Journal of Greenhouse Gas Control. 2011; 5(1): 49-60.

[26] Chen, W. H., Lin, M. R., Leu, T. S., Du, S.W. An evaluation of hydrogen production from the perspective of using blast furnace gas and coke oven gas as feedstocks. International Journal of Hydrogen Energy. 2011; 36(18): 11727-37.

[27] Turpeinen, E., Raudaskoski, R., Pongra, E., Keiski, R.L. Thermodynamic analysis of conversion of alternative hydrocarbon-based feedstocks to hydrogen. International Journal of Hydrogen Energy. 2008; 33(22): 6635-43.

[28] Wang, R., Rohr, D. Natural gas processing technologies for large scale solid oxide fuel cells. Fuel Chemistry Division Preprints. 2002; 47(2): 506-7.

[29] ADEME (Agence de l'Environnement et de la Maîtrise de l'Energie) et MEEDDM (Ministère de l'Ecologie, de l'Energie, du Développement Durable et de la Mer), 2010. Panorama des voies de valorisation du CO_2, p. 95-106.

[30] Shen, J., Wang, Z. Z. A New Technology for Producing Hydrogen and Adjustable Ratio Syngas from Coke Oven Gas. Energy & Fuels. 2007; 21(6): 3588–92.

[31] Bermúdez, J.M., Arenillas, A., Menéndez, J.A. Equilibrium prediction of CO_2 reforming of coke oven gas: Suitability for methanol production. Chemical Engineering Science. 2012; 82: 95-103.

[32] Bermúdez, J.M., Fidalgo, B., Arenillas, A., Menéndez, J.A. Dry reforming of coke oven gases over activated carbon to produce syngas for methanol synthesis. Fuel. 2010; 89(10): 2897–2902.

[33] Bermúdez, J.M., Fidalgo, B., Arenillas, A., Menéndez, J.A., CO_2 reforming of coke oven gas over a Ni/cAl_2O_3 catalyst to produce syngas for methanol synthesis. Fuel. 2012; 94:197-203.

[34] Bermúdez, J.M., Arenillas, A., Menéndez, J.A. Syngas from CO_2 reforming of coke oven gas: Synergetic effect of activated carbon/Ni-γAl_2O_3 catalyst. International journal of hydrogen energy. 2011; 36(21):13361-8.

[35] Zhang, G., Dong, Y., Feng, M., Zhang, Y., Zhao, W., Cao, H. CO_2 reforming of CH_4 in coke oven gas to syngas over coal char catalyst. Chemical Engineering Journal. 2010; 156(3): 519-523.

[36] Norinaga, K., Yatabe, H., Matsuoka, M., Hayashi, J.I. Application of an Existing Detailed Chemical Kinetic Model to a Practical System of Hot Coke Oven Gas Reforming by Non-catalytic Partial Oxidation. Industrial & Engineering Chemistry Research. 2010; 49(21): 10565-71.

[37] Yue, B. Wang, X., Ai, X., Yang, J., Li, L., Lu, X., Ding, W. Catalytic reforming of model tar compounds from hot coke oven gas with low steam/carbon ratio over Ni/MgO–Al_2O_3 catalysts. Fuel Processing Technology. 2010; 91: 1098–1104.

[38] Onazaki, M., Watanabe, K., Hashimoto, T., Saegusa, H. Hydrogen production by the partial oxidation and steam reforming of tar from hot coke oven gas. Fuel. 2006; 85(2): 143-9.

[39] Remus, R., Aguado-Monsonet, M. A., Roudier, S., Delgado-Sancho, L. Best Available Techniques (BAT) Reference Document for Iron and Steel Production, Industrial Emissions Directive 2010/75/EU (Integrated Pollution Prevention and Control). Joint Research Centre, Institute for prospective technological studies, Reference Report. European Commission. 2013

[40] Ekbom, T., Hulteberg, C., Grip, C. E., Larsson, M., Lundgren, J., Nilsson, L., Tuna, P. International Conference on Applied Energy ICAE 2012, Jul 5-8, 2012, Suzhou, China.

[41] Lundgren, J., Ekbom, T., Hulteberg, C., Larsson, M., Grip, C. E., Nilsson, L., Tuna, P. Methanol production from steel-work off-gases and biomass based synthesis gas. Applied Energy. 2013; 112: 431-39.

[42] Bermúdez, J.M., Ferrera-Lorenzo, N., Luque, R., Arenillas, A., Menéndez, J.A. New process for producing methanol from coke oven gas by means of CO_2 reforming. Comparison with conventional process. Fuel Processing Technology. 2013; 115: 215-21.

[43] Liu, P., Gerogiorgis, D. I, Pistikopoulos, E. N. Modeling and optimization of polygeneration energy systems. Catalysis Today. 2007; 127: 347–59.

[44] Liu, P., Pistikopoulos, E. N., Li, Z. A mixed-integer optimization approach for polygeneration energy systems design. Computers and Chemical Engineering. 2009; 33: 759–68.

[45] Xuelei, Z., Songling, W., Haiping, C., Lanxin, Z. System design and economic evaluation of coke oven gas utilization projects. Power and Energy Engineering Conference (APPEEC), Asia-Pacific. 2010; p.1-4.

[46] Ghanbari, H., Helle, M., Pettersson, F., Saxen, H. Optimization study of steelmaking under novel blast furnace operation combined with methanol production. Industrial & Engineering Chemistry Research. 2011; 50(21): 12103-12.

[47] Ghanbari, H., Helle, M., Saxen, H.Process integration of steelmaking and methanol production for suppressing CO_2 emissions—A study of different auxiliary fuels. Chemical Engineering and Processing: Process Intensification. 2012; 61: 58-68.

[48] Ghanbari, H., Helle, M., Pettersson, F., Saxen, H. Steelmaking integrated with a polygeneration plant for improved sustainability. Chemical Engineering Transactions. 2012; 29: 1033-38.

[49] Ghanbari, H., Saxen, H., Grossmann, I. E. Optimal design and operation of a steel plant integrated with a polygeneration system. AIChE Journal. 2013; 59(10): 3659-70.

[50] Ghanbari, H., Saxen, H. A techno-economic analysis of using residual top gases in an integrated steel plant. Chemical Engineering Transactions. 2013; 35:169-74.

[51] Yi, Q., Feng, J., Li, W. Y. Optimization and efficiency analysis of polygeneration system with coke-oven gas and coal gasified gas by Aspen Plus. Fuel. 2012; 96: 131-40.

[52] Yi, Q., Lu, B., Feng, J., Wu, Y., Li, W. Evaluation of newly designed polygeneration system with CO2 recycle. Energy & Fuels. 2012; 26(2): 1459-69.

[53] Yi, Q., Feng, J., Wu, Y., Li, W. 3E (energy, environmental, and economy) evaluation and assessment to an innovative dual-gas polygeneration system. Energy. 2014; 66: 285-94.

[54] Li, Z., Liu, P., He, F., Wang, M., Pistikopoulos, E. Simulation and exergoeconomic analysis of a dual-gas sourced polygeneration process with integrated methanol/DME/DMC catalytic synthesis. Computers and Chemical Engineering. 2011; 35:1857– 62.