Post-combustion CO_2 capture by aqueous ammonia in an advanced IGCC fired with high-sulphur coal

Davide Bonalumi[a] and Antonio Giuffrida[b]

[a] *Politecnico di Milano - Dipartimento di Energia, Milano, Italy, davide.bonalumi@polimi.it*
[b] *Politecnico di Milano - Dipartimento di Energia, Milano, Italy, antonio.giuffrida@polimi.it*

Abstract:

Coal is indispensable to satisfy the world's thirst for energy as innovative coal technologies are for climate protection. This paper focuses on the integrated gasification combined cycle (IGCC) technology, based on its potentially higher cycle efficiency than competitive pulverized-coal steam cycles. However, cycle efficiency alone is not enough for CO_2 emission mitigation, as a more significant decrease in CO_2 emissions can be reached with the implementation of carbon capture and storage (CCS). In particular, an advanced air-blown IGCC system is considered when gasifying a coal with high-sulphur content, which is really relevant for the coal market. The sulphur removed as H_2S from the coal-derived gas before fuelling the combustion turbine is used in a wet sulphuric acid process to supply an agent useful to control ammonia slip in a post-combustion CO_2 capture system based on ammonia scrubbing and designed for a reduced energy demand. Thus, reducing the energy impact of the CCS technology will reflect on higher power plant efficiency, related to a presumable lower cost of the generated electricity, as a high-sulphur coal is used as fuel input.
In detail, a cooled ammonia-based process is more attractive than a more conventional chilled ammonia-based solution, with overall IGCC efficiency equal to 41.7% for 90% of CO_2 avoided and specific primary energy consumption (SPECCA) for CO_2 avoided as low as 2.3 MJ/kgCO_2. Although IGCC efficiency increases if lower levels of CO_2 capture are considered, as plausible, the calculation results show the SPECCA for CO_2 avoided ranging from 80% to 90% is almost constant.

Keywords:

Air-Blown, Chilled ammonia, Cooled ammonia, High-sulphur coal, IGCC, SPECCA.

1. Introduction

Coal is much more abundant and economically feasible than other fossil fuels for electricity generation. Nevertheless, CO_2 emissions are the most significant environmental concern with coal burning in power plants. Currently, there are two main challenges for coal-fired power generation: the improvement of plant efficiency, as a way to reduce the cost of electricity, and the development of technologies such as carbon capture and storage (CCS) to reduce CO_2 emissions.

Dealing with pollutants emissions, it is necessary to remind that sulphur is one of the main elements present in coal [1] and its content is really relevant to the coal market. In particular, coal with sulphur content above 1% is classified as high-sulphur coal. The researchers' interest in the use of high-sulphur coal is really actual as highlighted by very recent calculations of ultra-supercritical plants [2] and experiments on chemical looping combustion [3] and pilot-scale gasification [4]. As a matter of fact, the integrated gasification combined cycle (IGCC) is a competitive technology to pulverized coal-fired steam power plants, with higher cycle efficiency as well as more effective removal of sulphide compounds from the coal-derived fuel gas, as removal efficiency values easily exceed 99%. The current IGCC technology is mainly based on oxygen-blown coal gasification, but a significant activity on air-blown IGCC has been conducting during the last years by Mitsubishi Heavy Industries in Japan, where the 250 MW_{el} demonstration plant in Nakoso was started up in 2007 [5]. Shifting from oxygen- to air-blown technology implies the economic advantage related to the much smaller air separation unit and the potentially higher cycle efficiency [6]. In perspective, IGCC efficiency values as high as 53% should be possible based on advanced technologies such as

1500°C-class combustion turbine and hot fuel gas clean-up [7]. Nevertheless, CCS is essential to reduce CO_2 emissions considerably and post-combustion CO_2 capture seems to be the most feasible solution in the short term, as flue gas scrubbing with MEA is a mature technology, with the alternative option of the Chilled Ammonia Process (CAP) proposed by Alstom [8]. Apart from the specific technology, the CCS energy cost is not negligible and results in lower power plant performance [9], even though possible reductions of such a cost seem to be possible if a cooled instead of a chilled ammonia-based CO_2 capture process is considered [10].

This paper proposes an original solution for firing high-sulphur coal in power plants for electricity generation with CO_2 capture, limiting the energy penalty related to the CCS technology. According to the higher energy conversion efficiency, an air-blown IGCC is considered and integrated with a CO_2 capture process, based on (i) a chilled and on (ii) a cooled aqueous ammonia scrubbing, in a plant where ammonia slip is properly controlled and reduced to traces thanks to the significant amount of H_2S removed from the coal-derived gas at the desulphurization unit of the IGCC.

2. CO_2 capture by ammonia scrubbing

In the chilled ammonia process, a slurry consisting of a liquid in equilibrium with solid ammonium bicarbonate (NH_4HCO_3) is produced in an absorber. The slurry releases CO_2 at a relatively high pressure, when heated in a desorber, therefore the liquid is cooled and delivered to the absorber for a new cycle. Besides, the CAP layout is equipped with a water wash at the top of both the absorber and the regenerator, because of ammonia slip (NH_3 volatility results in NH_3 vaporization to the flue gas [11]), which is more significant for higher CO_2 absorption temperature.

Referring to real cases, Alstom has concluded several tests on pilot plants with different layouts, but other tests are still ongoing [12]. There is to point out that the first pilot plants operated with fairly high regeneration pressure (from 20 up to 40 bar), based on the conventional absorption-regeneration scheme, but more recent plants operate at lower regeneration pressure [13].

Lots of technical papers on CAP-based CO_2 capture are present in the open literature. In particular, the authors' research group has gained a significant experience as regards (i) investigations of the design parameters for a CAP with a view to retrofitting an ultra-supercritical plant [14], (ii) energy and economic assessments of an ultra-supercritical plant integrated with CAP [15] and (iii) comparisons among different CAP-based plant layouts [16].

3. The CO_2–NH_3–H_2O system

Understanding the phase behaviour and the thermodynamics of the CO_2-NH_3-H_2O system [17] is important for engineers and researchers interested in post-combustion ammonia-based CO_2 capture. Such a ternary system forms an electrolyte solution, whose thermodynamic properties must be studied with an appropriate model. In particular, the Extended UNIQUAC thermodynamic model for gas solubility in salt solutions, developed by Thomsen and Rasmussen [18], was used in this paper. It derives from the original UNIQUAC expression by Abrams and Prausnitz [19], by adding a Debye-Hückel term to account additional excess Gibbs energy from the electrostatic interactions between ionic species. The model requires UNIQUAC volume and surface area parameters for each species, along with temperature-dependent binary interaction energy parameters for each pair of species. Phase equilibrium calculations are performed with the approach coupled with equilibrium speciation reactions, with potential solid phase precipitation. The liquid phase activity coefficients are calculated from the Extended UNIQUAC model, while the gas phase fugacity coefficients from the Soave-Redlich-Kwong equation of state. In addition to phase relations, the model reproduces also properties such as enthalpy and entropy, within the experimental accuracy [17].

4. Calculation tools

The thermodynamic models of the IGCC plants with CO_2 capture were implemented in the modular simulation code GS, integrated with the commercial code Aspen Plus®.

Mass and energy balances for the IGCC plants were carried out with the code GS [20], which is a simulation tool originally designed for research purposes by the authors' research group to calculate gas-steam cycles and progressively improved to calculate more complex systems. It has proved to yield highly accurate results in estimating the performance of combustion turbines and combined cycles [21] and has been successfully used to calculate mass and energy balances of a variety of power plant configurations, including gasification systems [22], desulfurization reactors [23], water-gas shift processes [24] as well as coal drying systems [25]. The main features of the code include: (i) the capability of reproducing very complex plant schemes by assembling basic modules, such as turbine, compressor, heat exchanger, etc., (ii) the use of built-in correlations for efficiency prediction of turbomachinery, as a function of the operating conditions, (iii) the use of built-in correlations to predict gas turbine cooling flows, (iv) the capability of calculating chemical equilibrium by Gibbs free energy minimization. Once the system to be calculated is defined as an ensemble of components, mass and energy balances of each component are calculated iteratively, until the conditions at all interconnections converge toward stable values.

The commercial code Aspen Plus® was used for the calculations of the CCS plant. In detail, the absorption and regeneration processes, better outlined in the next section, were simulated by means of the previously mentioned thermodynamic model that is not built inside the code but defined by the user, as successfully done by Darde et al. [26]. In particular, an exhaustive validation of the thermodynamic model was preliminarily carried out and the model results compared with experimental data available in literature. Some representative trends about this validation are shown in Fig. 1, limited to two temperatures of interest in an aqueous ammonia-based carbon capture process. On the other hand, the Soave-Redlich-Kwong equation of state was chosen to simulate both the cooling of the gas entering the CCS plant and the CO_2 compression station.

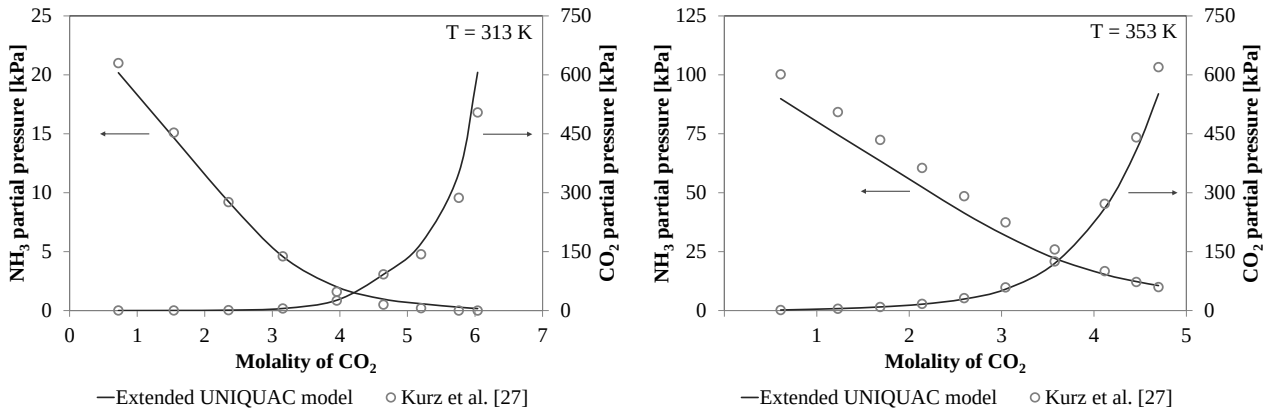

Fig. 1. Comparisons of the results from the thermodynamic model Extended UNIQUAC with experimental data by Kurz et al. [27], at 313 K on the left and at 353 K on the right.

5. IGCC and CCS plant layouts

The air-blown IGCC lay-out considered in this paper is based on the one formerly proposed in [6]. Each power plant consists of two gasification trains and two combustion turbines with two heat recovery steam generators, which share the same steam turbine. The schematic lay-out of the IGCC plant with no CO_2 capture is reported in Fig. 2. As regards the descriptions of both the two-stage air-blown gasification system and the IGCC plant, reference to [6] is made for the sake of brevity. However, some differences between the former plant and the current ones have to be specified.

- A high-sulfur Illinois #6 coal (61.27% C, 4.69% H, 8.83% O, 1.1% N, 3.41% S, 12% moisture, 8.7% ash - on a weight basis; 24.826 MJ/kg LHV) is considered as fuel input.
- As a consequence of the pressure drop (5 bar) for the coal-derived gas at the CT fuel valve, the gasification pressure is set at 28.1 bar.
- A heat exchanger is present before air boosting to the gasifier, with HP steam production.

- The H_2S removed (about 1.4 kg/s for each gasification train) from the raw coal-derived gas at the AGR station is not recovered in a Claus plant [28], but used as input in a wet sulphuric acid process, as better described hereafter.
- As recommended in [29], an advanced combustion turbine with TIT equal to 1360°C is used as topping cycle (see the Appendix for calculation assumptions).
- HP and MP levels at the heat recovery steam cycle are fixed to 144 and 36 bar, respectively.
- When exiting the HRSG, the composition of the gas on a molar basis is: 0.89% Ar, 9.97% CO_2, 4.36% H_2O, 75.1% N_2, 9.68% O_2.

Further specific details concerning the streams numbered in Fig. 2, in terms of pressure, temperature and mass flow rate, are thoroughly reported in [6].

The lay-out of the IGCC plant with CO_2 capture is strictly similar to the one in Fig. 2, with a few exceptions. As a matter of fact, part of the CO_2 delivered by the CO_2 compressor at the CCS plant is recycled back to the gasification island for coal loading (see Figs 3 and 4), so both the air separation unit and the N_2 compressor are not necessary. As the air blown to the gasifier is not oxygen-enriched, using CO_2 instead of N_2 for coal loading results in slight variations in the cold gas efficiency and in the fuel gas composition [9]. Finally, more steam is extracted from the bottoming cycle in case of CO_2 capture, so stream 25 in Fig. 2 has to supply (i) the heat for H_2S stripping at the AGR unit and (ii) the heat required at the CCS plant for the regeneration of the CO_2-rich solution, accomplished with CO_2 release, and for NH_3 stripping, if necessary, as detailed in the following.

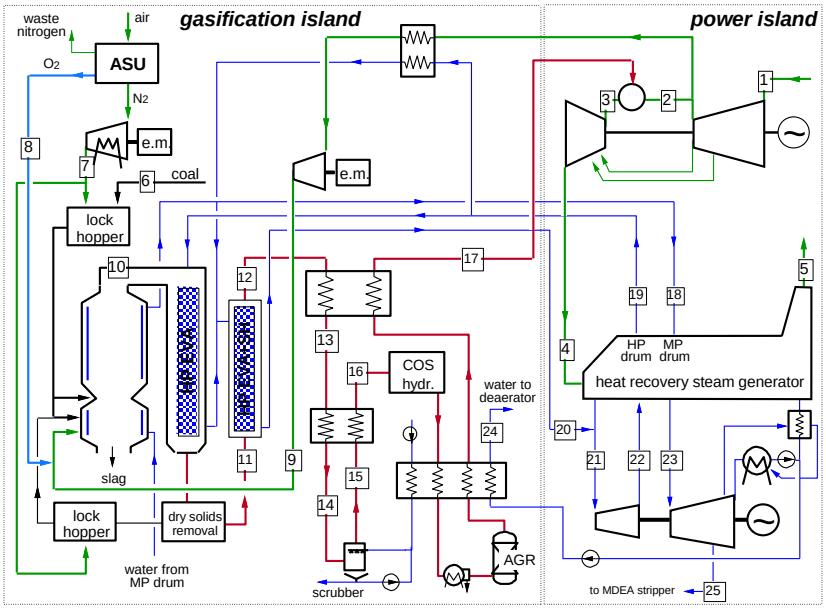

Fig. 2. Schematic of the IGCC plant with no CO_2 capture.

5.1 The CCS plant in chilled mode

As schematized in Fig. 3, the gas stream exiting the HRSG is chilled in a first section of the plant with three contact coolers in cascade at decreasing temperature levels: the first system operates with an ambient air-cooled water loop and the other two with chilled water loops (HX3 and HX4). The evaporation temperature of the chillers is set as low as possible, with prevention of ice formation (the gas from the HRSG releases moisture when passing through the contact coolers). As the gas flowing through the three contact coolers and the next absorber (ABS) experiences a pressure drop, a fan (BL) is present. The gas temperature rise due to the fan is promptly reduced by the third contact cooler, before the gas enters the CO_2 absorption section, whose layout is conventional and similar to the one proposed in [16].

The CCS plant consists of an absorber (ABS) and a regenerator (RGN) with a recuperative heat exchanger (RCP1) as well as a high-pressure pump (PM2) for the rich solution to the regenerator

and a chilling exchanger (HX2) on the lean solution to the absorber. The rich solution from the absorber is pumped to a hydrocyclone (HC), which separates the solids, sent to regeneration with a small portion of liquid, from the bulk of the liquid, chilled in HX1 and recycled back to the absorber in order for the process temperature to be as cold as possible, being the absorption reaction exothermal. The ammonia slipping from the absorber wash is reduced to traces by acid washing in a dedicated tower (WT1). In detail, the H_2S-rich stream stripped after solvent regeneration at the desulphurization unit of the IGCC is supposed to react with air, according to the following reaction (the presence of N_2 and other inerts in air is neglected for the sake of simplicity):

$$H_2S + \frac{3}{2} O_2 \rightarrow SO_2 + H_2O \tag{1}$$

After SO_2-to-SO_3 oxidation in presence of a vanadium oxide catalyst, hydration and condensation, H_2SO_4 is ready to be used in order to drastically reduce ammonia slip in the stream exiting the absorption section, according to the following reaction:

$$2\ NH_3 + H_2SO_4 \rightarrow (NH_4)_2SO_4 \tag{2}$$

The heat released with H_2S oxidation and the other exothermic reactions in the wet sulphuric acid process was ignored in the next calculations.

In such a chilled mode, ammonia slip is limited, so it can completely react with the H_2S from the desulphurization unit and no after-treatment NH_3 capture is necessary.

As regards the path of the CO_2 stream exiting the regenerator, a condenser for moisture separation, operating with a dedicated air cooler, and a water wash tower (WT2) for ammonia slip control, with an air-cooled closed loop, are present. Finally, there is the CO_2 compression station, which consists of air-cooled stages with the same pressure ratio (CM1 to CM3), intercoolers and condensed water knockouts to dehydrate the CO_2 stream. CO_2 enters the compression station at a pressure depending on regeneration conditions and exits the last stage at slightly supercritical pressure. After recycling the CO_2 necessary for coal loading and further cooling, the supercritical liquid CO_2 stream is ultimately pumped to storage.

5.2 The CCS plant in cooled mode

The layout in Fig. 4 for the CCS plant in cooled mode is very similar to the one in Fig. 3 and previously outlined. However, two main differences have to be pointed out.

- When cooling the gas exiting the HRSG, two contact coolers are sufficient with no chiller.
- Ammonia slip in cooled mode is significant, so an absorption-desorption cycle just before the final acid washing (WT1) is necessary for a level of ammonia slip reducible by the H_2S available from the desulphurization unit of the IGCC, as previously described. In particular, part of the NH_3 in the gaseous stream exiting the absorber is firstly reduced in a wash tower (WT3), resulting in a NH_3-rich solution pumped from the wash tower to a stripper (STR), where NH_3 in the gaseous phase is recovered and delivered to the absorber (ABS).

5.3 Operation parameters for the CCS plants

Six operation parameters were considered when running simulations of the CCS plants in both the chilled and cooled modes (see Table 1):

- the operation temperature at the absorber (chilled or cooled mode),
- the amount of CO_2 captured,
- the ammonia initial concentration (conc) in the aqueous solution,
- the NH_3-to-CO_2 ratio in the absorber (K),
- the percentage of rich solution recycled (ric) to the absorber,
- the regeneration pressure.

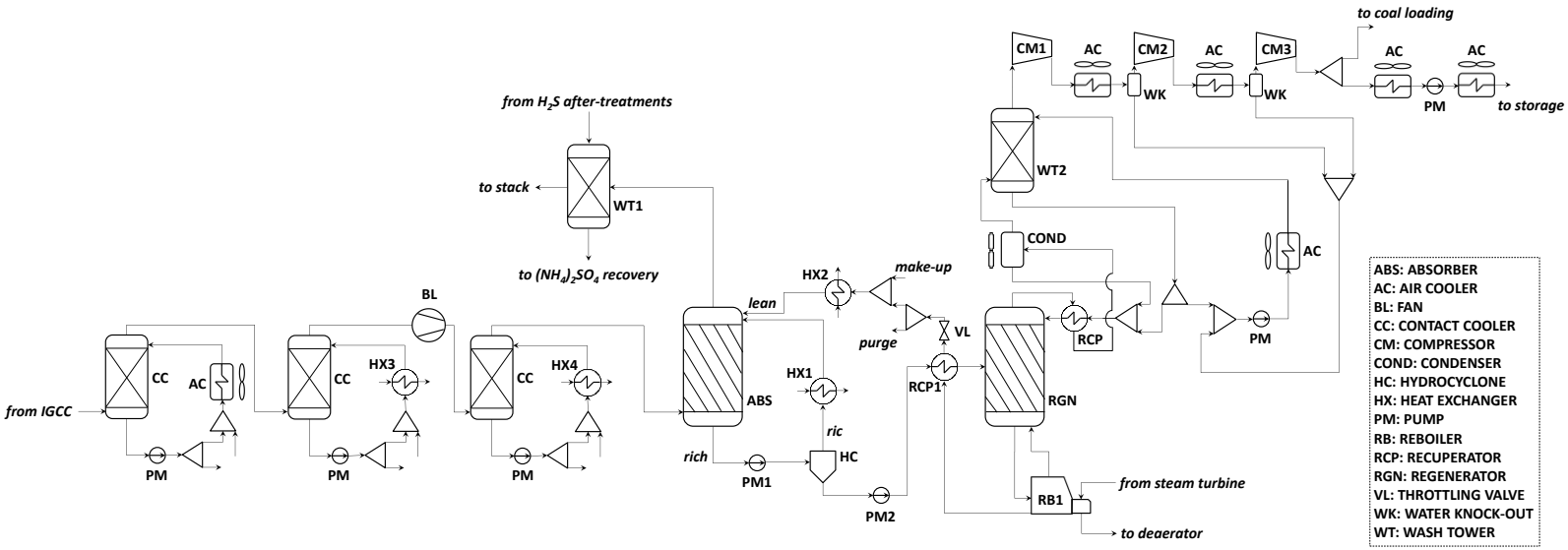

Fig. 3. Schematic of the CCS plant for the chilled case.

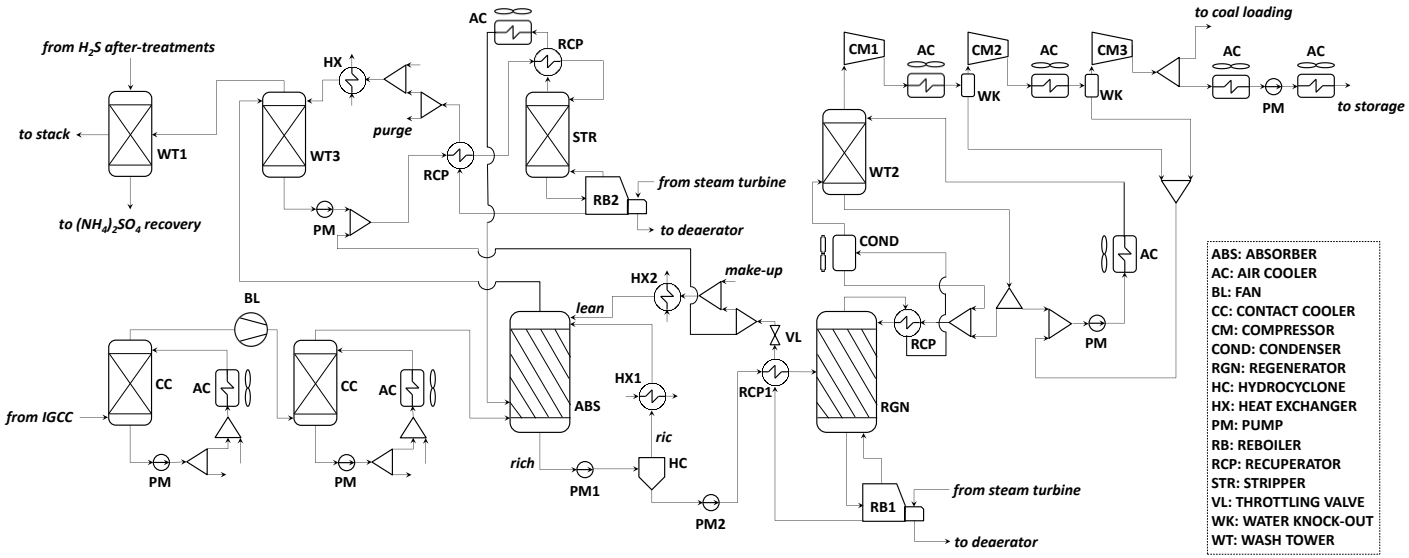

Fig. 4. Schematic of the CCS plant for the cooled case.

In detail, the parameters conc and K are defined as

$$\text{conc} = \left.\frac{\dot{m}_{NH_3}}{\dot{m}_{NH_3} + \dot{m}_{H_2O}}\right|_{lean} \tag{3}$$

$$K = \frac{\dot{n}_{NH_3,\,lean}}{\dot{n}_{CO_2,\,in}} \tag{4}$$

where K is the ratio between the number of NH_3 moles in the lean solution line to the absorption reactor and the number of CO_2 moles in the line from the HRSG outlet. In particular, setting a regeneration pressure requires to operate at a specific temperature for a fixed level of CO_2 capture, whereas setting the operation temperature at the absorber directly affects (i) the temperature for the exhaust gas treatments, (ii) the flow rate of the lean solution and (iii) the amount of rich solution recycled to the absorber (ric in both Figs 3 and 4).

The values reported in Table 1 were fixed for the preliminary investigations of energy demand by the CCS plant, based on the experience achieved with former works [15,16]. Further details on other parameters assumed for CCS simulations are reported in the Appendix. Referring to the most significant energy consumptions, Fig. 5 shows a comparative overview of some representative cases for the CCS plant in chilled mode, purposely limited for the sake of conciseness. According to the preliminary investigations of energy demand by the CCS plant, in both chilled and cooled modes, the best set of operation parameters from an energy-saving point of view for each case was chosen, as reported in Table 2. In detail, three levels of CO_2 capture (i.e. 80%, 85% and 90%) in both the modes were considered for the cases presented and discussed in the next section. Cases with amounts of CO_2 captured less than 80% were not investigated in this work, even though techno-economic considerations are always necessary to set a proper target of CO_2 capture. As detailed in Table 2, different sets of parameter values were found for the three cases in chilled mode, whereas the same set of values was found for cases CO-85 and CO-90, in cooled mode, differently from case CO-80.

Table 1. Preliminary assumptions for the investigated parameters of the CCS plant

Parameter	Values
Absorber operation temperature, °C	7, 20
Amount of CO_2 captured, %	80, 85, 90
NH_3 initial concentration (conc), kg/kg	0.05, 0.1, 0.15, 0.2
NH_3-to-CO_2 ratio (K), mol/mol	4, 4.5, 5, 5.5, 5.75
Recycled rich solution (ric), %	10, 20, 30, 40, 50, 60, 70, 80, 90
Regeneration pressure, bar	5, 10, 20

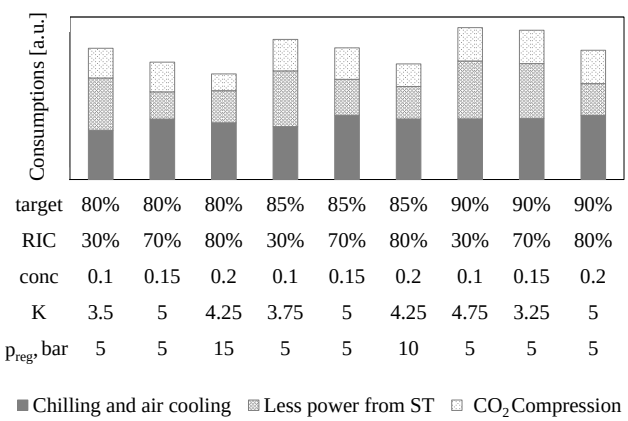

Fig. 5. Comparative overview of the energy consumptions (in arbitrary units) for the CCS plant in chilled mode, based on the amount of CO_2 captured (target) and four process parameters.

Table 2. Key-parameters assumed for CCS plant calculations

	CH-80	CH-85	CH-90	CO-80	CO-85	CO-90
ric, wt%	80	80	80	50	10	10
conc, wt%	20	20	20	10	5	5
K, mol/mol	4	4.25	5	5.25	4.75	4.75
regeneration pressure, bar	15	10	5	5	5	5

6. Results

The results of the IGCC calculations are reported in Tables 3 and 4, as regards power details of the bottoming cycle and the after-treatment station (for one gasification train), and discussed with reference to power balances and overall IGCC performance. In detail, the size of the IGCC plant depends on the CT technology at the topping cycle, with the assumed mass flow rate at the CT outlet (665 kg/s). As anticipated, numbers 80, 85 and 90 refer to the level of CO_2 capture, whereas CH and CO stand for chilled and cooled mode, respectively.

The following results for IGCC plants with CO_2 capture in chilled mode are worth of attention.

- The power output from the steam turbine reduces because of steam extraction for the heat duty of the regenerator. Power requirements of bottoming cycle pumps reduce too, as less steam expands through the LP stages of the turbine. Thus, the heat rejected at the condenser is almost halved.
- The same power for exhaust cooling is required, before the gas enters the CO_2 absorber.
- At the CO_2 capture plant, the heat duty of the regenerator reduces when less CO_2 is removed from the flue gas, even though the operation temperature at the regenerator slightly raises for lower CO_2 capture levels, as a consequence of the regeneration pressure detailed in Table 2. In case of higher levels of CO_2 capture, the number of reacting moles increases, so power requirements for chilling and air cooling raise (the CO_2 chemical absorption is an exothermic process), whereas pumping power nearly halves from case CH-80 to case CH-90, due to the specific regeneration pressure.
- Different CO_2 compression energy costs in Table 3 depend both on the amount of CO_2 captured and on the CO_2 pressure at the inlet of the compression system (see Table 2).

Paying attention to the overall results in Table 3 and moving from case CH-90 to case CH-80, it is possible to appreciate an obvious increase in net power output and LHV efficiency. However, the incremental improvements are more interesting from case CH-90 to case CH-85 than from case CH-85 to case CH-80. On the other hand, referring to the specific primary energy consumption for CO_2 avoided (SPECCA) defined as:

$$\mathrm{SPECCA} = \frac{3600 \cdot \left(\frac{1}{\eta} - \frac{1}{\eta_{\mathrm{ref}}} \right)}{\mathrm{ER}_{\mathrm{ref}} - \mathrm{ER}} \tag{5}$$

the minimum value is calculated just for case CH-85, as no significant difference is appreciated for case CH-80. Based on these results and referring to the performance of air-blown IGCC plants with pre-combustion CO_2 capture [30], chilled ammonia scrubbing does not seem to be a particularly attractive technology.

On the other hand, looking at the results reported in Table 4 for the CCS cases in cooled mode, IGCC performance is completely different and definitely interesting. Once again, the simulations for cases from CO-80 to CO-90 were run with the parameters detailed in Table 2. Apart from considerations similar to the ones for the cases in chilled mode, proper attention should now be paid to the presence of the NH_3 stripper and its related heat duty. As a matter of fact, ammonia slip affects the overall energy demand of the CCS plant. This phenomenon is less evident for the CH cases, where the lower absorber temperature prevents large NH_3 slipping in the gas phase and the

final acid wash is sufficient to reduce NH_3 to traces. Although NH_3 concentration in the flue gas is sensibly higher in CO-cases and a NH_3-removal section before the final acid wash is necessary (the amount of H_2S removed at the AGR unit of the IGCC is not sufficient to completely reduce NH_3 to traces), the SPECCA is almost constant and really lower than the ones calculated for the cases in chilled mode.

Table 3. Power details for the bottoming steam cycle and the CCS plant (the latter just for one gasification train) in chilled mode

	REF	CH-80	CH-85	CH-90
Steam turbine, MW_{el}	501.1	476.4	476.7	474.1
Steam cycle and condenser HRSC pumps, MW_{el}	13.0	10.6	10.4	10.2
Heat rejected at the condenser, MW	641.1	379.8	356.9	337.8
Exhaust cooling				
Air Cooler and chillers, MW_{el}	-	7.6	7.6	7.6
Fan, MW_{el}	-	5.9	5.9	5.9
Pumps, MW_{el}	-	0.2	0.2	0.2
CO_2 capture plant				
Heat duty at the regenerator, MW	-	171.5	182.8	193.7
Regeneration temperature, °C	-	74.4	71.1	67.4
Chillers and air cooler, MW_{el}	-	32.9	35.1	36.9
Pumps, MW_{el}	-	1.9	1.4	1.0
CO_2 compression				
IC compressors and pump, MW_{el}	-	9.3	12.8	19.0
Air coolers, MW_{el}	-	0.5	0.5	0.7
Overall results				
Gross electric power output, MW_{el}	1047.0	1000.8	1001.1	998.4
IGCC plant auxiliaries, MW_{el}	96.9	74.3	74.1	73.9
CO_2 C&S plant auxiliaries, MW_{el}	-	116.5	127.2	142.6
Net electric power, MW_{el}	950.1	809.9	799.8	781.9
Net electric LHV efficiency, %	48.93	41.30	40.78	39.87
Specific emissions, kg_{CO2}/MWh	647.7	174.8	133.9	91.6
SPECCA, MJ/kg_{CO2}	-	2.88	2.86	3.01

Table 4. Power details for the bottoming steam cycle and the CCS plant (the latter just for one gasification train) in cooled mode

	REF	CO-80	CO-85	CO-90	CO-80*
Steam turbine, MW_{el}	501.1	446.0	438.8	433.1	443.5
Steam cycle and condenser HRSC pumps, MW_{el}	13.0	10.2	9.9	9.7	10.1
Heat rejected at the condenser, MW	641.1	340.2	310.3	285.8	329.1
Exhaust cooling					
Air Cooler and chillers, MW_{el}	-	0.8	0.8	0.8	0.8
Fan, MW_{el}	-	5.5	5.5	5.5	5.5
Pumps, MW_{el}	-	1.1	1.1	1.1	1.1
CO_2 capture plant					
Heat duty at the regenerator, MW	-	177.3	210.1	221.7	199.6
Regeneration temperature, °C	-	104.6	105.3	106.5	104.2
Heat duty at NH_3 stripper, MW	-	29.4	13.6	18.8	10.4
Temperature for NH_3 stripping, °C	-	97.0	97.8	97.9	97.8
Chillers and air cooler, MW_{el}	-	3.91	3.85	4.31	3.52
Pumps, MW_{el}	-	1.4	2.0	2.0	2.0
CO_2 compression					
IC compressors and pump, MW_{el}	-	16.7	17.8	18.9	16.7
Air Coolers, MW_{el}	-	0.6	0.6	0.6	0.6
Overall results					
Gross electric power output, MW_{el}	1047.0	970.3	963.1	957.5	967.8
IGCC plant auxiliaries, MW_{el}	96.9	73.9	73.6	73.3	73.8
CO_2 C&S plant auxiliaries, MW_{el}	-	60.1	63.3	66.4	60.6
Net electric power, MW_{el}	950.1	836.4	826.3	817.7	833.4
Net electric LHV efficiency, %	48.93	42.64%	42.13%	41.69%	42.49%
Specific emissions, kg_{CO2}/MWh	647.7	170.3	127.9	86.4	170.5
SPECCA, MJ/kg_{CO2}	-	2.27	2.29	2.27	2.34

Ultimately, an additional case, namely CO-80*, with the same parameters found and set for both cases CO-85 and CO-90 (see Table 2) is reported in Table 4. These last results point out that a proper setting of the key-parameters, as reported in Table 2, is really important in order to reduce the energy cost introduced with the CCS plant.

7. Conclusions

An original way to effectively use low-price coal for electricity generation with reduced CO_2 emissions has been proposed. The integration between an advanced air-blown IGCC, fired with high-sulphur coal, and a post-combustion ammonia-based CCS plant was assessed. Based on a preliminary parametric investigation, optimum conditions were defined for three levels of CO_2 capture (from 80% to 90%). In particular, two absorber temperatures were fixed in order to evaluate a first chilled and a second cooled case, with specific key-parameters finely tuned for the investigated plant. The ammonia slip, which is the main drawback related to ammonia-based CCS technology, is here controlled and reduced to traces by acid wash with the H_2S recovered in the desulphurization unit of the IGCC, resulting in ammonium sulphate, which is a valuable fertilizer.

Compared to the case with no CO_2 capture, IGCC efficiency reduces from 7.6 to 9.1 and from 6.3 to 7.2 percentage points when increasing CO_2 capture, in chilled and cooled mode, respectively. Moreover, based on a cooled ammonia-based CCS technology, an almost constant specific primary energy consumption for CO_2 avoided was calculated as low as 2.27 MJ/kg_{CO2}, independently from the amount of CO_2 captured in the investigated range from 80% to 90%. Thus, the ammonia-based CCS technology reveals itself more attractive in cooled than in chilled mode, when firing high-sulphur coal in IGCC plants.

Appendix A

The following tables detail the main assumptions for IGCC calculations.

Table A.1. Main assumptions for combustion turbine calculations[1]

Air pressure loss, %	1
Compressor pressure ratio	18.1
Compressor polytropic efficiency, %	92.25
Compressor leakage, % of the inlet flow	0.75
Fuel valve pressure loss, bar	5
Cooled/Uncooled turbine stage isentropic efficiency, %	91.5/92.5
Turbine inlet temperature, °C	1360
Heat loss at combustor, % of fuel LHV	0.9
Mass flow rate at CT outlet, kg/s	665
CT auxiliaries, % of gross power	0.35
Turbine/compressor mechanical efficiency, %	99.865
Electric generator efficiency, %	98.7

Table A.2. Main assumptions for CCS plant calculations

CO_2 capture plant	
Fluid temperature at air-cooler outlet, °C	25
Pressure drop in air-coolers, %	1
Specific consumption for heat rejection by air-cooling, $kW_{el} \cdot MW^{-1}$	15.9
Pinch point ΔT in heat exchangers, °C	5
Coefficient of performance for chilling, $MW \cdot MW_{el}^{-1}$	5
Fan polytropic efficiency, %	0.85
Fan pressure ratio	1.1
Pumps hydraulic/mechanical-electric efficiency, %	80/95
Pressure drop in contact coolers, bar	0.01

[1] The cooled gas turbine model by Chiesa and Macchi [21] was used to simulate the advanced CT unit, as recommended in [29]. Further specific details on the calculations of the gasification station and the heat recovery steam cycle are reported in [6].

Pressure drop in columns, bar	0.03
Maximum ammonia in CO_2 to storage, mg·Nm^{-3}	10
CO_2 compression	
Number of intercooled compression stages	3
Intercooled compressor isentropic efficiency, %	85
Pressure at the last intercooled compressor/pump outlet, bar	80/110
CO_2 temperature at intercooler outlet, °C	25
Pump hydraulic efficiency, %	75

Nomenclature

AGR	Acid gas removal
CAP	Chilled ammonia process
CCS	Carbon capture and storage
CT	Combustion turbine
ER	CO_2 emission rate, kg_{CO2}/kWh
LHV	Lower heating value, MJ/kg
HP/MP	High/medium pressure, bar
IGCC	Integrated gasification combined cycle
$\dot{m}$	Mass flow rate, kg/s
$\dot{n}$	Molar flow rate, mol/s
ref	Reference (power plant with no CO_2 capture)
SPECCA	Specific primary energy consumption for CO_2 avoided, MJ/kg_{CO2}
η	Efficiency

References

[1] Chou C.L., Sulfur in coals: A review of geochemistry and origins. International Journal of Coal Geology 2012;100:1-13.

[2] Cau G., Tola V., Bassano C., Performance evaluation of high-sulphur coal-fired USC plant integrated with SNOX and CO_2 capture sections. Applied Thermal Engineering 2015;74:136-145.

[3] Wang B., Xiao G., Song X., Zhao H., Zheng C., Chemical looping combustion of high-sulfur coal with NiFe2O4-combined oxygen carrier. J Therm Anal Calorim 2014;118:1593-1602.

[4] Pettinau A., Dobó Z., Köntös Z., Zsemberi A., Experimental characterization of a high sulfur Hungarian brown coal for its potential industrial applications. Fuel Processing Technology 2014;122:1-11.

[5] Ishibashi Y., Shinada O., First year operation results of CCP's Nakoso 250MW air-blown IGCC demonstration plant. In: Gasification Technologies Conference 2008, Washington, DC, USA.

[6] Giuffrida A., Romano M.C., Lozza G., Thermodynamic analysis of air-blown gasification for IGCC applications. Applied Energy 2011;88(11):3949-3958.

[7] Giuffrida A., Romano M.C., Lozza G., Efficiency enhancement in IGCC power plants with air-blown gasification and hot gas clean-up. Energy 2013;53:221-229.

[8] Kozak F., Petig A., Morris E., Rhudy R., Thimsen D., Chilled ammonia process for CO_2 capture. Energy Procedia 2009;1:1419-1426.

[9] Giuffrida A., Bonalumi D., Lozza G., Amine-based post-combustion CO_2 capture in air-blown IGCC systems with cold and hot gas clean-up. Applied Energy 2013;10:44-54.

[10] Bonalumi D., Giuffrida A., Lozza G., A study of CO_2 capture in advanced IGCC systems by ammonia scrubbing. Energy Procedia 2014;45:663-670.

[11] Budzianowski W.M., CO_2 reactive absorption from flue gases into aqueous ammonia solutions: The NH_3 slippage effect. Environment Protection Engineering 2011;37(4):5-19.

[12] Ennenbach F., Mongstad Milestone 3 - Alstom Chilled Ammonia Plant, Status & Results – Available at: <http://www.gassnova.no/no/Protected%20Library/MM3> [accessed 30.1.2015]

[13] Kozak F., Telikapalli V., Hiwale R., Bollinger R., CCS Project: Chilled Ammonia Process at the AEP Mountaineer Plant. In: COAL-GEN Conference & Exhibition; 2011 August 17-19; Columbus, OH, USA.

[14] Valenti G., Bonalumi D., Macchi E., Modeling ultra super critical power plants integrated with the Chilled Ammonia Process. Energy Procedia 2011;4:1721-1728.

[15] Valenti G., Bonalumi D., Macchi E., A parametric investigation of the Chilled Ammonia Process from energy and economic perspectives. Fuel 2012;101:74-83.

[16] Valenti G., Bonalumi D., Fosbøl P., Macchi E., Thomsen K., Gatti D., Alternative Layouts for the Carbon Capture with the Chilled Ammonia Process, Energy Procedia 2013;37:2076-2083.

[17] Aqueous Salt Solutions – Available at: <http://www.phasediagram.dk/>.[accessed 30.1.2015].

[18] Thomsen K., Rasmussen P., Modeling of vapor-liquid-solid equilibrium in gas-aqueous electrolyte systems. Chemical Engineering Science 1999;54:1787-1802.

[19] Abrams D.S., Prausnitz J.M., Statistical thermodynamics of liquid mixtures: A new expression for the excess Gibbs Energy of partly or completely miscible systems. AIChE Journal 1975;21:116-128.

[20] GS (Gas-Steam cycles) – Available at: <http://www.gecos.polimi.it/software/gs.php> [accessed 30.1.2015].

[21] Chiesa P., Macchi E., A thermodynamic analysis of different options to break 60% electric efficiency in combined cycle power plants. Journal of Engineering for Gas Turbine and Power 2004;126(4):770-785.

[22] Giuffrida A., Romano M.C., Lozza G., Thermodynamic assessment of IGCC power plants with hot fuel gas desulfurization. Applied Energy 2010;87(11):3374-3383.

[23] Giuffrida A., Romano M.C., On the effects of syngas clean-up temperature in IGCCs. In: Proceedings of ASME Turbo Expo 2010; 2010 June 14-18; Glasgow, UK.

[24] Giuffrida A., Romano M.C., Lozza G., CO_2 capture from air-blown gasification-based combined cycles. In: Proceedings of ASME Turbo Expo 2012; 2012 June 11-15; Copenhagen, Denmark.

[25] Giuffrida A., Impact of Low-Rank Coal on Air-Blown IGCC Performance. In: Proceedings of ASME Turbo Expo 2014; 2014 June 16-20; Düsseldorf, Germany.

[26] Darde V., Thomsen K., van Well W.J.M., Bonalumi D., Valenti G., Macchi E., Comparison of two electrolyte models for the carbon capture with aqueous ammonia. International Journal of Greenhouse Gas Control 2012;8:61-72.

[27] Kurz F., Rumpf B., Maurer G., Vapor-liquid-solid equilibria in the system NH3-CO2-H20 from around 310 to 470 K: New experimental data and modeling. Fluid Phase Equilibria 1995;104:261-275.

[28] Gargurevich I.A., Hydrogen sulfide combustion: Relevant issues under Claus furnace conditions. Ind. Eng. Chem. Res. 2005;44:7706-7729.

[29] European best practice guidelines for assessment of CO_2 capture technologies - Available at: <http://caesar.ecn.nl/fileadmin/caesar/user/documents/D_4.9_best_practice_guide.pdf> [accessed 30.1.2015].

[30] Moioli S., Giuffrida A., Gamba S., Romano M.C., Pellegrini L., Lozza G., Pre-combustion CO_2 capture by MDEA process in IGCC based on air-blown gasification. Energy Procedia 2014;63:2045-53.